Model :	3931BGG
Size :	0.39-inch
Emitting color :	Green
Mode :	Common-Anode (CA)
Digit :	3-Digit
Category :	LED 7-Segment Display
Maker :	XLITX Technology

Prices : $0.80 = 100 Pieces $0.49 = 500 Pieces $0.46 = 1000 Pieces (Free shipping)

Dimension & Diagram

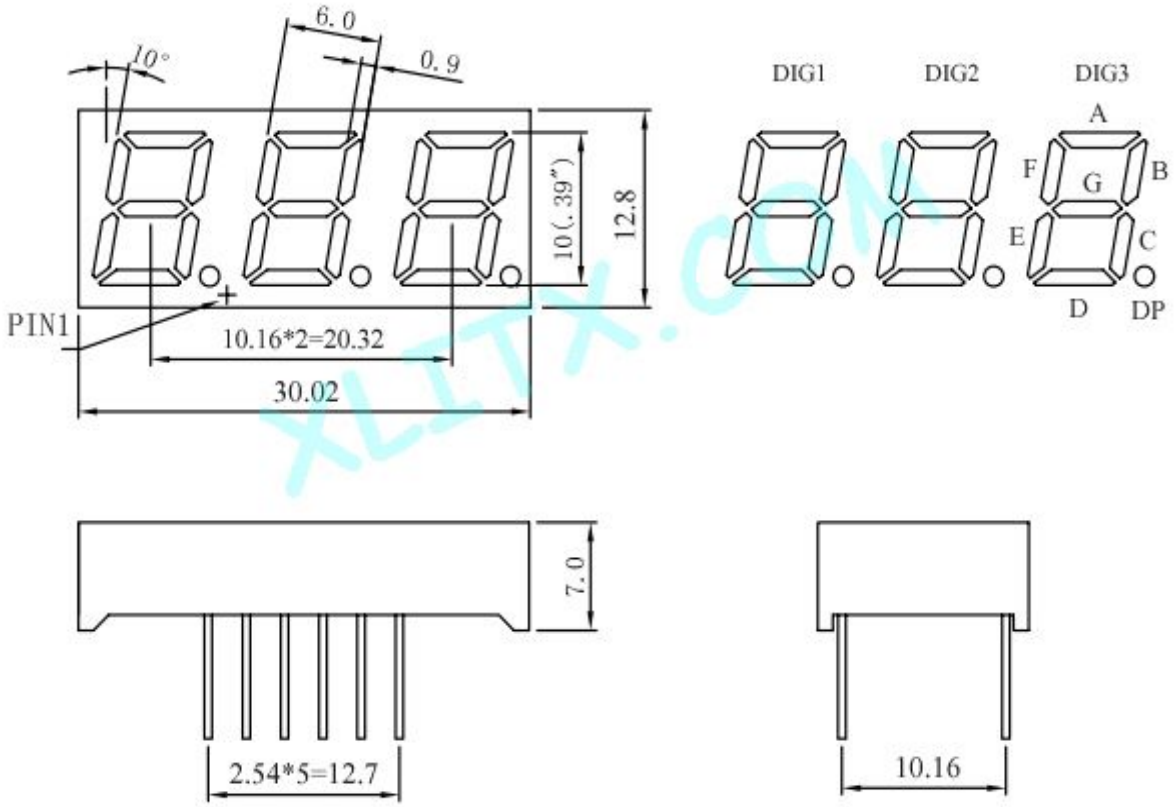

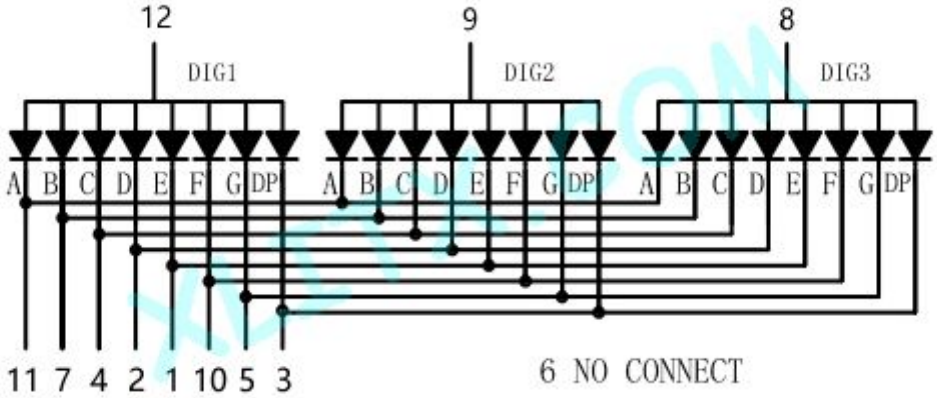

Green Electro-Optical Parameter

1. Electro-Optical Characteristics(Ta=25℃)

PARAMETER	SYMBOL	DEVICES (Green)		UNIT	TEST CONDIONS
		TYP	MAX		
Peak Emission Wavelengrth	λp	525		nm	IF=10mA
Forward Voltage	VF	3.5		V	IF=10mA
Reverse Current	IR		50	μA	VR=5V
Segment To Segment (Dot To Dot) Luminonous Intensity Ratio	IV-M	1.5:1			IF=20

2. Absolute Maximun Ratings(Ta=25℃)

PARAMETER	SYMBOL	DEVICES (Green)	UNIT
Power Dissipation Per Dice	pad	52.5	mw
Derating Linear From 25℃ Per Dice		0.27	mA/℃
Continuous Forward Current Per Dice	Iaf	25	mA
Peak Forward Ourrent Per Dice (Duty Cycle 1/10,10KHz)	Ipf	80	mA
Reverse Voltage Per Dice	Vr	5	V
Operating Temperature	Topr	-20℃ (to) +75℃	
Storage Temperature	Tstg	-20℃ (to) +85℃	
Solder Temperature		1.6 Inch Below Seating Place for 5 seconds at 230℃	
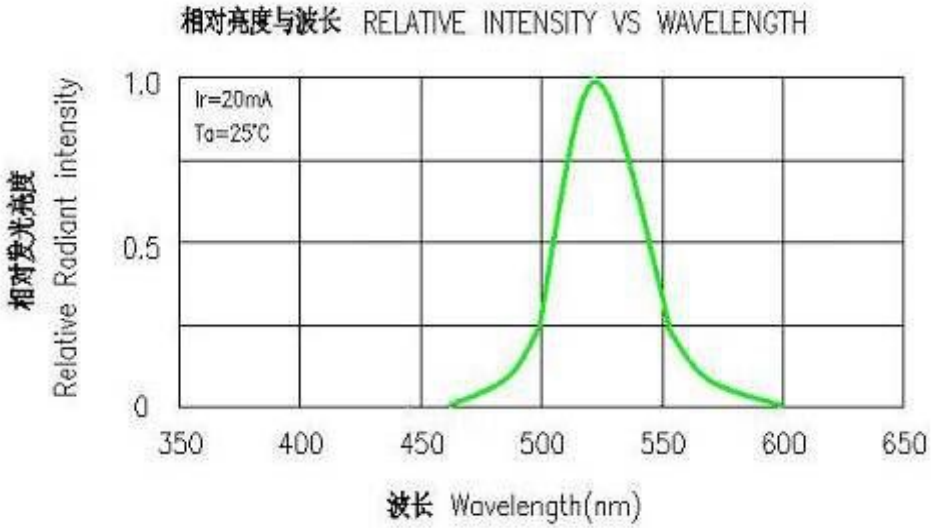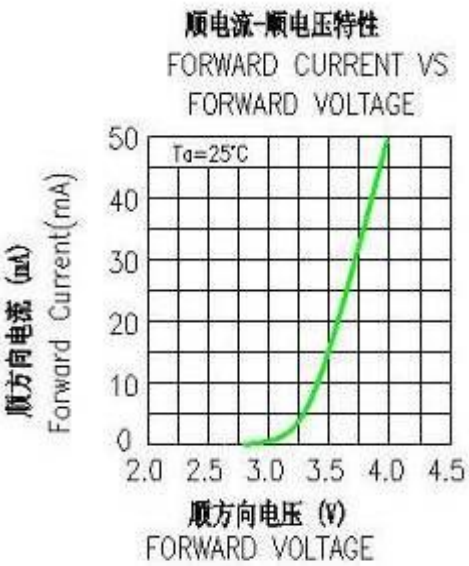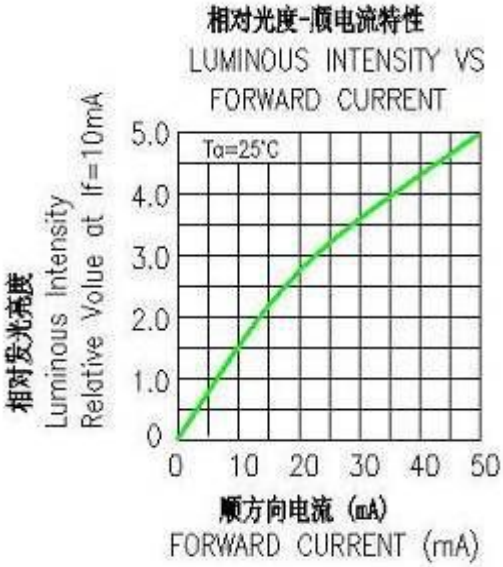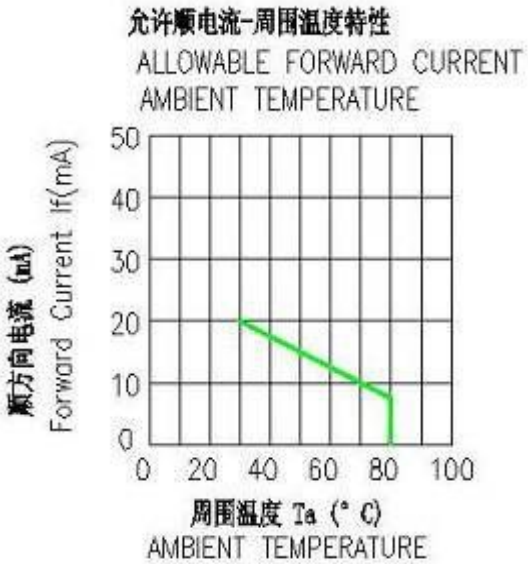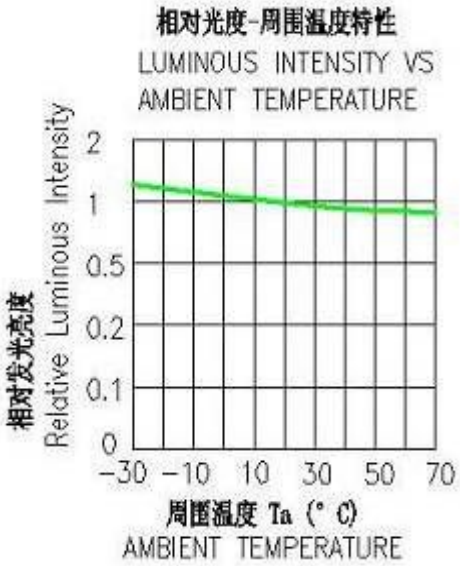
3. Electro-Optical Curve